UKUR BIAS - SCREN DIMATIKAN
UKUR SCREEN - PLATE DIMATIKAN

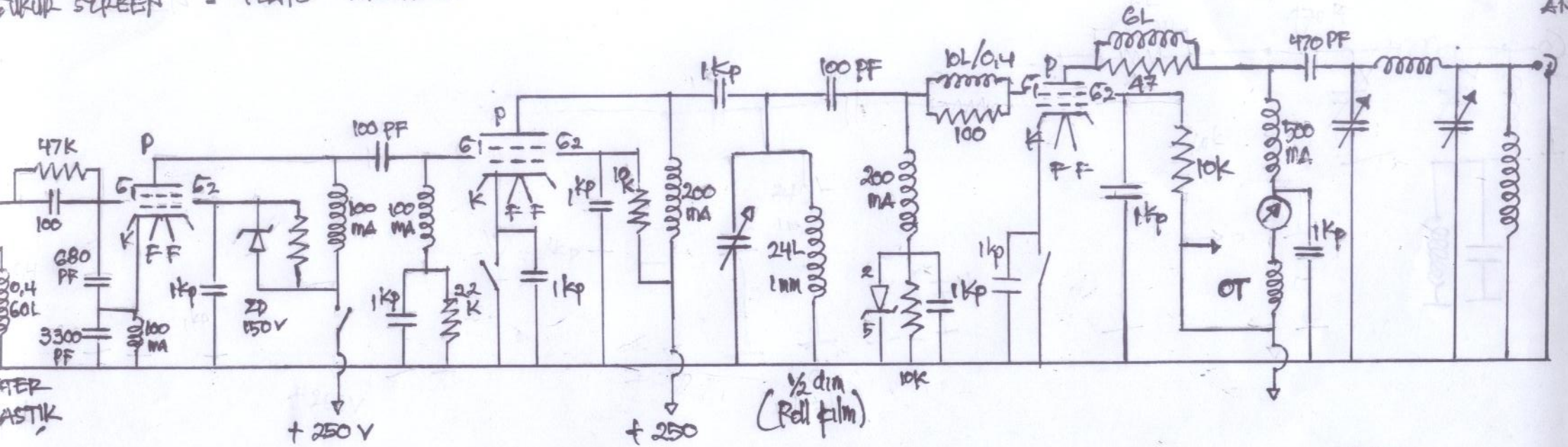

= P = 5
G1 = 5
G2 = 4
K = 8
F = 2 & 7

= P = 8
G1 = 4
G2 = 6
K = 5
F = 2 & 7
Shild = 1 = GROUND
G3 = 3 = GROUND

G1 = 3 K = 4
G2 = 2 F = 1 & 5

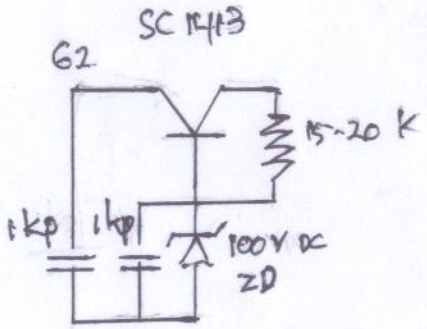

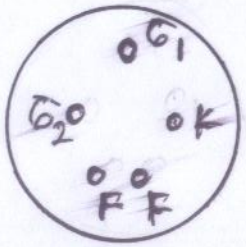
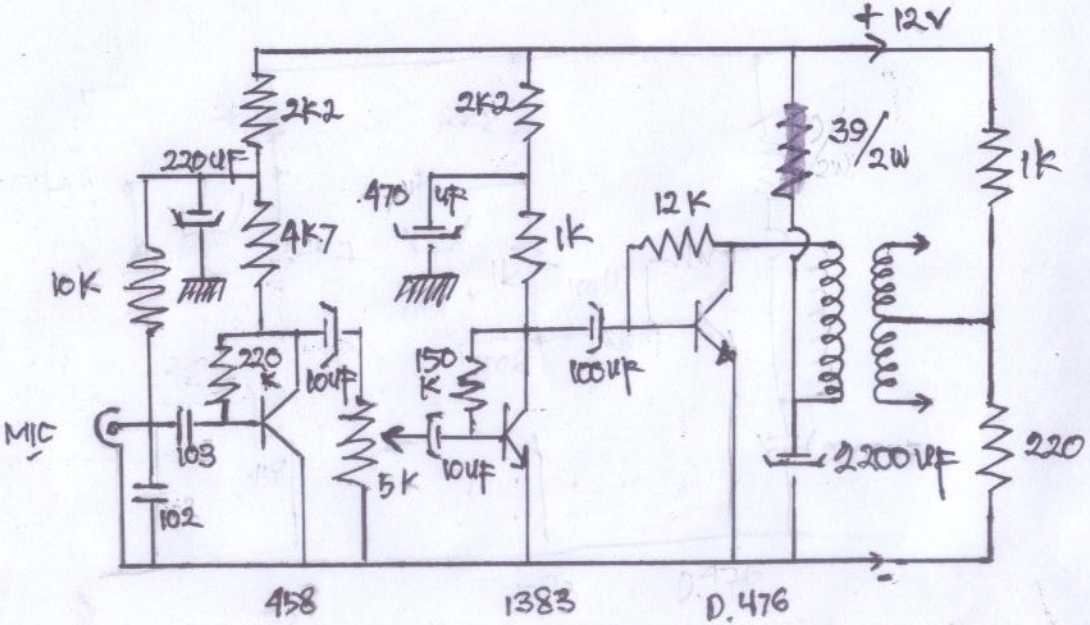
807